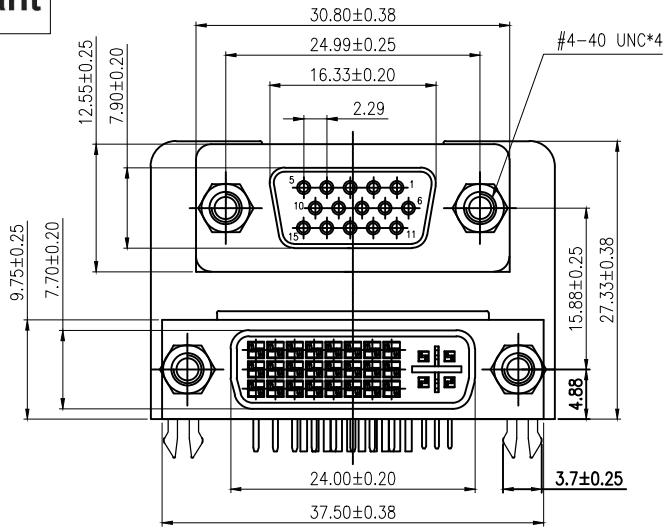

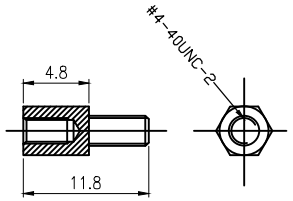

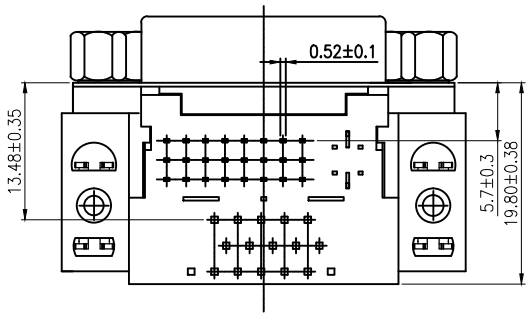

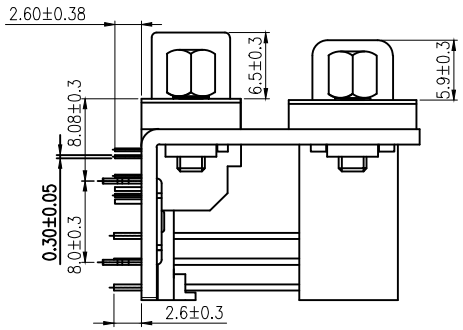

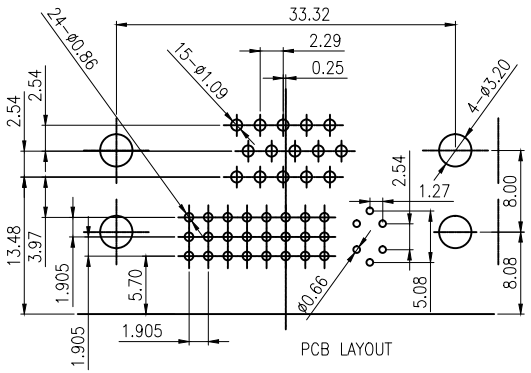

NOTE:
MATERIALS:
1. Housing: PBT/PA66 +30%G.F
   VGA Color: Blue
   DVI Color: White
2. Cover: PA66+30%G.F Color: White
3. Contacts: Brass
4. Shell: SPCC
5. Rivet: BRASS
6. Board Lock: SPCC
7. Bracket: SPCC
8. Screw: STEEL

FINISH:
1. Contacts: Gold Flash
   (0.8U"min)Plated on Contact Area Sn 100u" Plated on Soldertails Nickel Under Plated Over All)
2. Shell: Nickel Plated(80U"MIN)
3. Rivet: Nickel Plated(80U"MIN)
4. Board Lock: Sn 100U" Plated UNDER NI 50U"
5. Bracket: Nickel 80U"MIN Plated
6. Screw: Nickel 80U"MIN Plated

NO.	DESCRIPTION	QTY	MATERIAL	TREATMENT
8	COVER	1	PBT+30%G/F	Blue (661C)
7	HARPOON	2	SPCC	Tin (Ni30u" Sn80u")
6	SCREW	2	STEEL	Ni 80u"
5	RIVET	2	COPPER ALLOY	Ni 50-80u"
4	BRACKET	2	PBT+30%G/F	Blue (661C)
3	SHELL	1	SPCC	Ni 80u"
2	CONTACT	15	BRASS	Matte Tin Gold Flash
1	INSULATOR	1	PBT+30%G/F	Blue (661C)

允祿科技有限公司
WINCONN TECHNOLOGY CO., LTD.

Title	HDR 15P Female DIP 90° DVI 24+5(15.88) With Harpoon					
Tolerances	Drawer	Naomi	Part No:			
Linear	Checked	Summer	WCT-DSC-AD3A32			
X ±0.15 .X ±0.05	Approved	Macus	Cus. Part No:			
	Date	2017.07.03	WCT-DSC-AD3A32			
Angles	Projection	Version	Size	A4	Units	mm
± 3°		A	Scale	1:1	Sheet	1/1